Ø 9,43” x 5,945” Ø 239.5 x 151 mm

63DBV

ETRI®

DC High Performance Fans

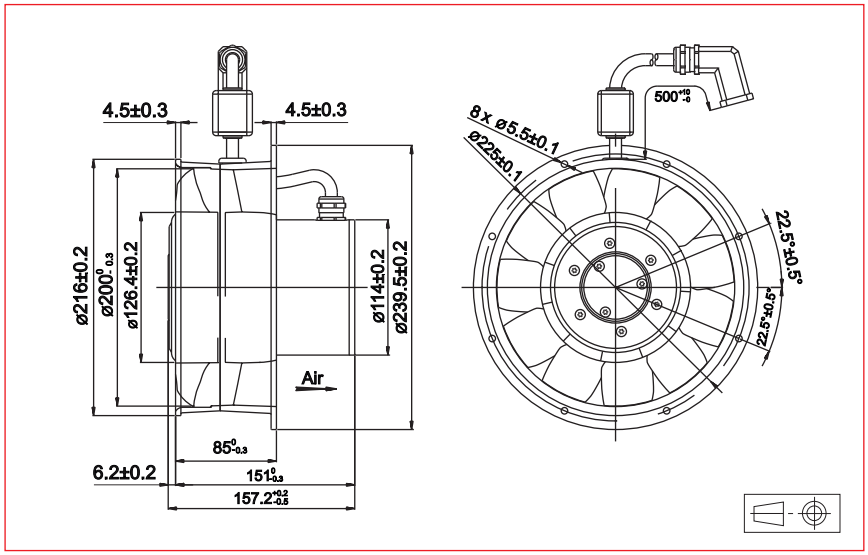

Approvals

CE

Brushless DC Motor
Electrical protection: integrated circuit
Housing material: aluminium
Impeller material: plastic UL 94 VO
Weight: 5,5 Kg
Bearing system: ball bearings

Available with:
- 0-10V speed control
- Tachometric output
- EN 61373 standard

Life expectancy

L-10 LIFE AT 40°C:
40 000 hours

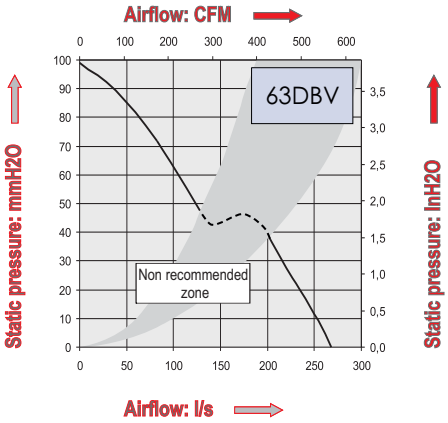

Part Number	Nominal voltage	Airflow	Noise level	Nominal speed	Input Power	Voltage range	Connexion type		Operating temperature	
	V	l/s	dB(A)	RPM	W	V	Leads	Terminals	Min.°C	Max.°C
63DBV01E6000	28	268	76	4750	175	(17-33)		X	-25	70

Additional versions:
Salt spray protected - Shock & vibration protected - Fire smoke - IP55

Non contractual document. Specifications are subject to change without prior notice. Pictures for information only. Edition 2012